PRODUCT DATA

MAXUMIZER® M20
AIR BLOWER (HORIZONTAL)

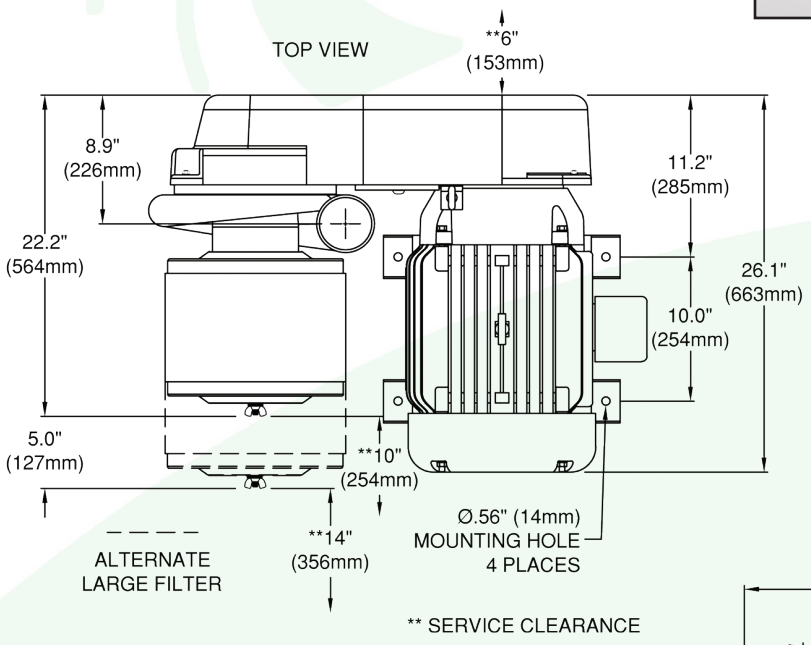

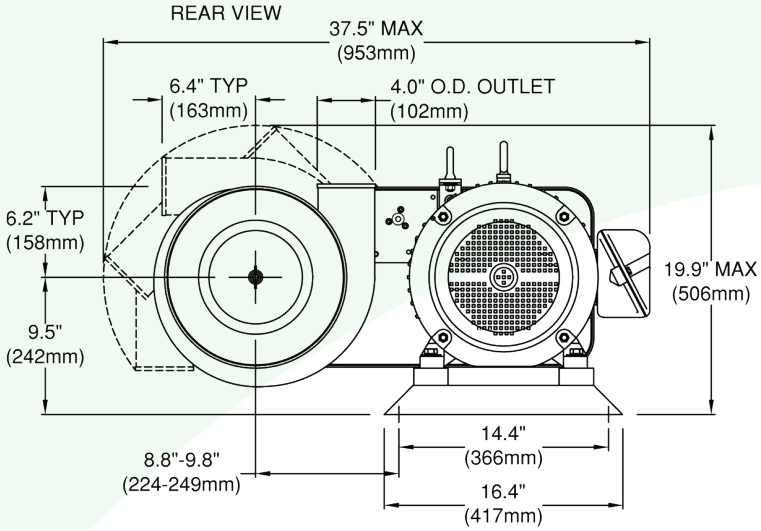

Part#	Weight
All Models	358lb. (163kg)

*Dimensions and weights are approximate and subject to change without notice.