PRODUCT DATA

MAXUMIZER® M15
AIR BLOWER (HORIZONTAL)

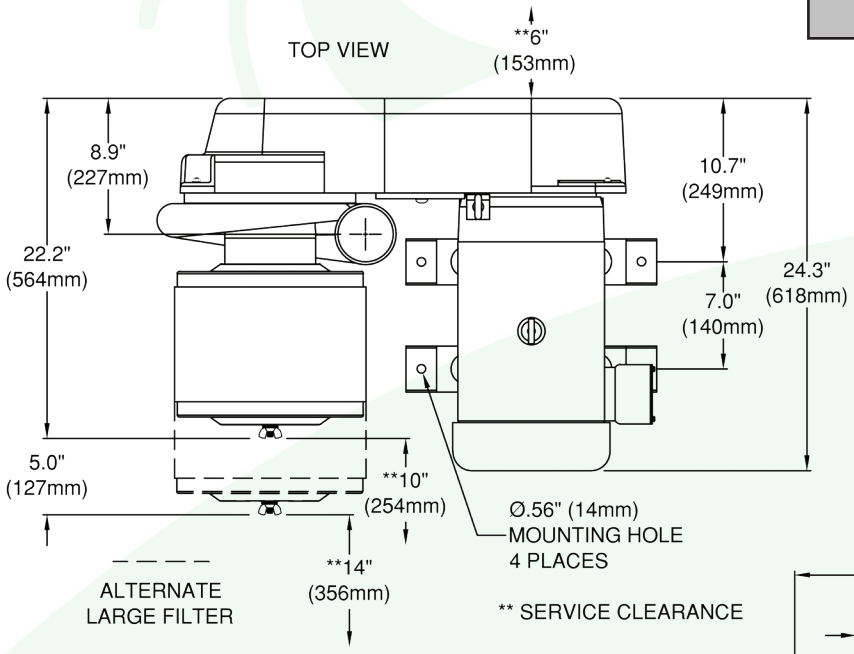

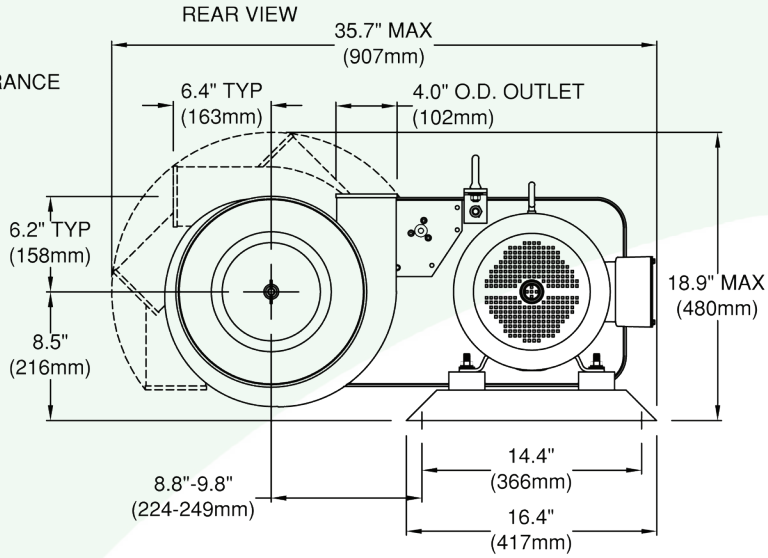

Part#	Weight
All Models	275lb. (125kg)

*Dimensions and weights are approximate and subject to change without notice.