PRODUCT DATA

MAXUMIZER® L10
AIR BLOWER (HORIZONTAL)

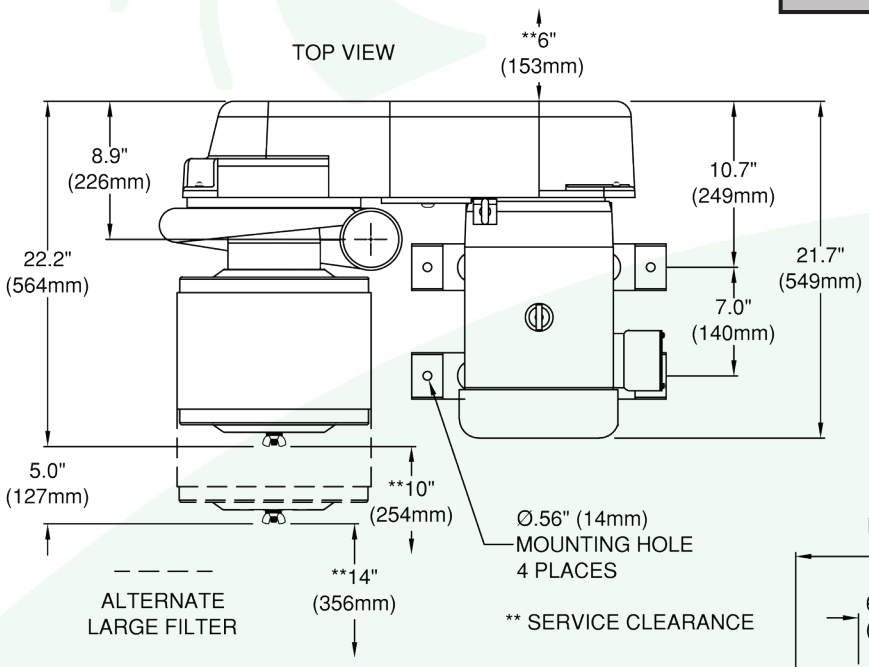

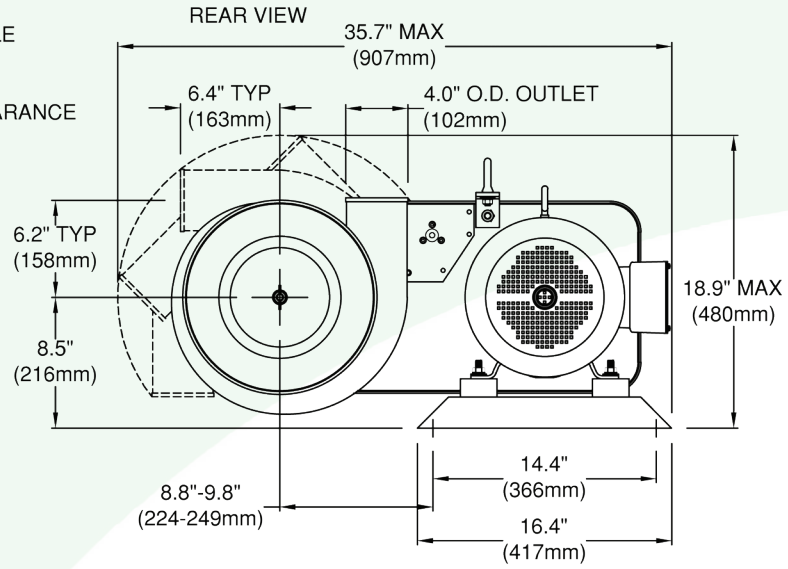

Part#	Weight
All Models	258lb. (117kg)

*Dimensions and weights are approximate and subject to change without notice.